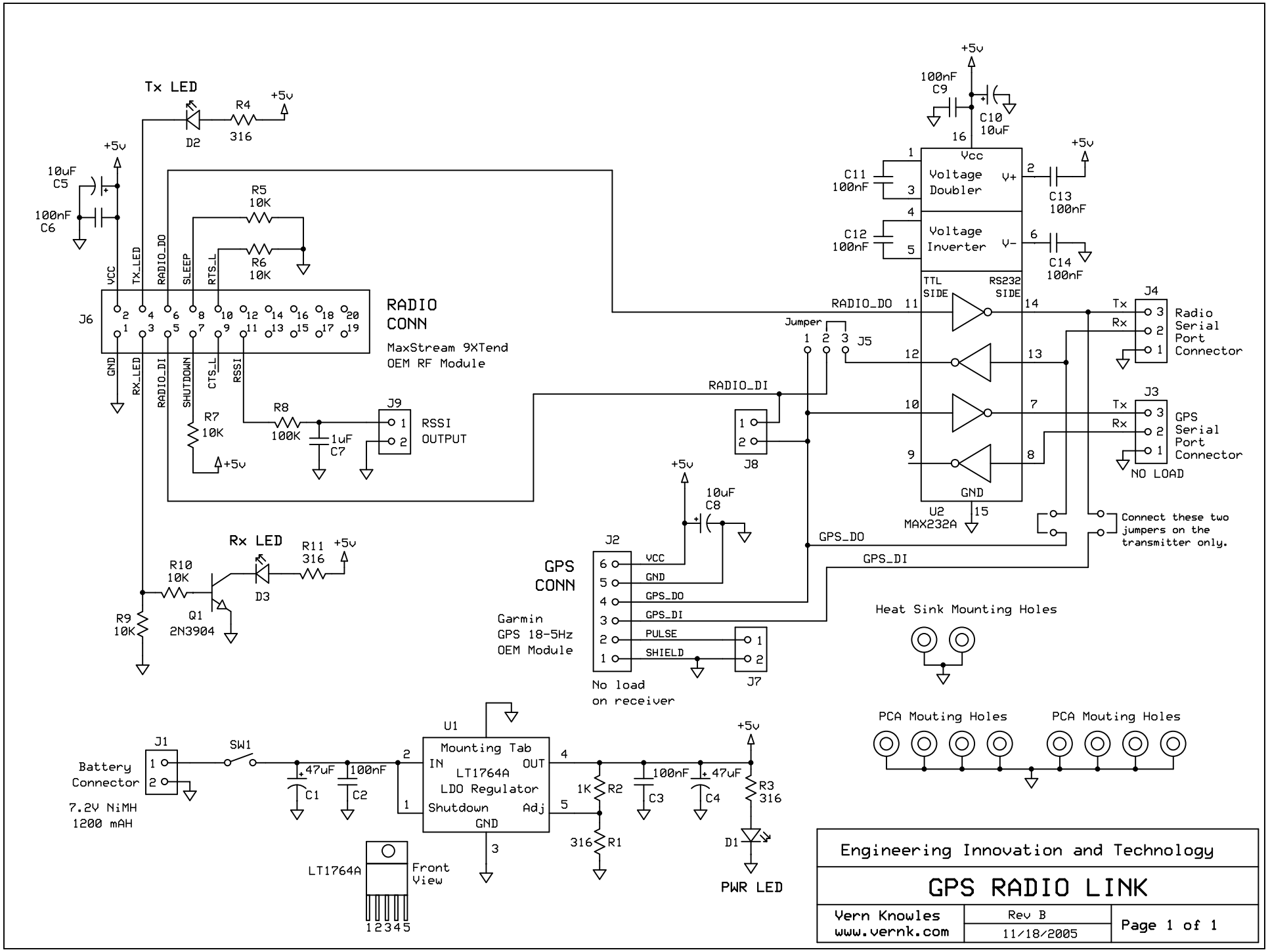

C:\Documents and Settings\Administrator\My Documents\SchematicsAndLayouts\GpsRadioLink_RevB.sch - Sheet1